YASKAWA

YRC1000micro OPTIONS
INSTRUCTIONS

STANDARD I/O SIGNAL ASSIGNMENT TABLE (PNP SPECIFICATION) FOR GENERAL-PURPOSE I/O BOARD TYPE: JANCD-ASF31-1E

Upon receipt of the product and prior to initial operation, read these instructions thoroughly, and retain for future reference.

MOTOMAN INSTRUCTIONS

MOTOMAN-□□□ INSTRUCTIONS
YRC1000micro INSTRUCTIONS
YRC1000micro OPERATOR'S MANUAL
YRC1000micro MAINTENANCE MANUAL
YRC1000micro ALARM CODES (MAJOR ALARMS) (MINOR ALARMS)

Have the following information available when contacting the YASKAWA Representative:
- System
- Primary Application
- Software Version *(Located on Programming Pendant by selecting: {Main Menu} - {System Info} - {Version})*
- Warranty ID *(Located on Robot Controller)*
- Robot Serial Number *(Located on Manipulator data plate)*
- Robot Sales Order Number *(Located on Robot controller data plate)*

The Americas YASKAWA Representative

- 24-hour Telephone Number: **(937) 847-3200**
  Use for urgent or emergency needs for technical support, service and/or replacement parts
- Routine Technical Inquiries: *techsupport@motoman.com*
  Allow up to 36 hours for response

Part Number: 181278-1CD
Revision: 2

MANUAL NO.
HW1484878 ② 1/13

DANGER

- This manual explains the standard I/O signal assignments for the PNP specification of the YRC1000micro system. Read this manual carefully and be sure to understand its contents before handling the YRC1000micro. Any matter not described in this manual must be regarded as "prohibited" or "improper".
- General information related to safety are described in "Chapter 1. Safety" of the YRC1000micro INSTRUCTIONS. To ensure correct and safe operation, carefully read "Chapter 1. Safety" of the YRC1000micro INSTRUCTIONS.

CAUTION

- In some drawings in this manual, protective covers or shields are removed to show details. Make sure that all the covers or shields are installed in place before operating this product.
- YASKAWA is not responsible for incidents arising from unauthorized modification of its products. Unauthorized modification voids the product warranty.

NOTICE

- The drawings and photos in this manual are representative examples and differences may exist between them and the delivered product.
- YASKAWA may modify this model without notice when necessary due to product improvements, modifications, or changes in specifications. If such modification is made, the manual number will also be revised.
- If your copy of the manual is damaged or lost, contact a YASKAWA representative to order a new copy. Be sure to tell the representative the manual number listed on the front cover.

Notes for Safe Operation

Read this manual carefully before installation, operation, maintenance, or inspection of your product.

In this manual, the Notes for Safe Operation are classified as “DANGER”, “WARNING”, “CAUTION”, or “NOTICE”.

DANGER

Indicates an imminently hazardous situation which, if not avoided, will result in death or serious injury. Safety Signs identified by the signal word DANGER should be used sparingly and only for those situations presenting the most serious hazards.

WARNING

Indicates a potentially hazardous situation which, if not avoided, will result in death or serious injury. Hazards identified by the signal word WARNING present a lesser degree of risk of injury or death than those identified by the signal word DANGER.

CAUTION

Indicates a hazardous situation, which if not avoided, could result in minor or moderate injury. It may also be used without the safety alert symbol as an alternative to “NOTICE”.

NOTICE

NOTICE is the preferred signal word to address practices not related to personal injury. The safety alert symbol should not be used with this signal word. As an alternative to “NOTICE”, the word “CAUTION” without the safety alert symbol may be used to indicate a message not related to personal injury.

Even items described as “CAUTION” may result in a serious accident in some situations.
At any rate, be sure to follow these important items.

NOTE

To ensure safe and efficient operation at all times, be sure to follow all instructions, even if not designated as “DANGER”, “WARNING” and “CAUTION".

DANGER

- Before operating the manipulator, make sure the servo power is turned OFF by performing the following operations. When the servo power is turned OFF, the SERVO ON LED on the programming pendant is turned OFF.
  - Press the emergency stop button on the programming pendant or on the external control device, etc.
  - Disconnect the safety plug of the safety fence. (when in the play mode or in the remote mode)

If operation of the manipulator cannot be stopped in an emergency, personal injury and/or equipment damage may result.

Fig. : Emergency Stop Button

- Before releasing the emergency stop, make sure to remove the obstacle or error caused the emergency stop, if any, and then turn the servo power ON.

Failure to observe this instruction may cause unintended movement of the manipulator, which may result in personal injury.

Fig. : Release of Emergency Stop

- Observe the following precautions when performing a teaching operation within the manipulator's operating range:
  - Be sure to perform lockout by putting a lockout device on the safety fence when going into the area enclosed by the safety fence. In addition, the operator of the teaching operation must display the sign that the operation is being performed so that no other person closes the safety fence.
  - View the manipulator from the front whenever possible.
  - Always follow the predetermined operating procedure.
  - Always keep in mind emergency response measures against the manipulator’s unexpected movement toward a person.
  - Ensure a safe place to retreat in case of emergency.

Failure to observe this instruction may cause improper or unintended movement of the manipulator, which may result in personal injury.

- Confirm that no person is present in the manipulator's operating range and that the operator is in a safe location before:
  - Turning ON the YRC1000micro power
  - Moving the manipulator by using the programming pendant
  - Running the system in the check mode
  - Performing automatic operations

Personal injury may result if a person enters the manipulator's operating range during operation. Immediately press an emergency stop button whenever there is a problem. The emergency stop button is located on the upper right of the programming pendant.

- Read and understand the Explanation of the Warning Labels before operating the manipulator.

DANGER

- In the case of not using the programming pendant, be sure to supply the emergency stop button on the equipment. Then before operating the manipulator, check to be sure that the servo power is turned OFF by pressing the emergency stop button.
  Connect the external emergency stop button to the 4-14 pin and 5-15 pin of the Safety connector (Safety).
- Upon shipment of the YRC1000micro, this signal is connected by a jumper cable in the dummy connector. To use the signal, make sure to supply a new connector, and then input it.

If the signal is input with the jumper cable connected, it does not function, which may result in personal injury or equipment damage.

WARNING

- Perform the following inspection procedures prior to conducting manipulator teaching. If there is any problem, immediately take necessary steps to solve it, such as maintenance and repair.
  - Check for a problem in manipulator movement.
  - Check for damage to insulation and sheathing of external wires.
- Return the programming pendant to a safe place after use.

If the programming pendant is left unattended on the manipulator, on a fixture, or on the floor, etc., the Enable Switch may be activated due to surface irregularities of where it is left, and the servo power may be turned ON. In addition, in case the operation of the manipulator starts, the manipulator or the tool may hit the programming pendant left unattended, which may result in personal injury and/or equipment damage.

Definition of Terms Used Often in This Manual

The MOTOMAN is the YASKAWA industrial robot product.

The MOTOMAN usually consists of the manipulator, the YRC1000micro controller, manipulator cables, the YRC1000micro programming pendant (optional), and the YRC1000micro programming pendant safety signal short circuit connector (optional).

In this manual, the equipment is designated as follows:

Equipment	Manual Designation
YRC1000micro controller	YRC1000micro
YRC1000micro programming pendant	Programming pendant (optional)
Cable between the manipulator and the controller	Manipulator cable
YRC1000micro programming pendant safety signal short circuit connector	Programming pendant safety signal short circuit connector (optional)

Descriptions of the programming pendant keys, buttons, and displays are shown as follows:

Equipment		Manual Designation
Programming Pendant	Character Keys /Symbol Keys	The keys which have characters or symbols printed on them are denoted with [ ]. e.g. [ENTER]
	Axis Keys /Numeric Keys	[Axis Key] and [Numeric Key] are generic names for the keys for axis operation and number input.
	Keys pressed simultaneously	When two keys are to be pressed simultaneously, the keys are shown with a “+” sign between them, e.g. [SHIFT]+[COORD].
	Mode Switch	Mode Switch can select three kinds of modes that are denoted as follows: REMOTE, PLAY or TEACH. (The switch names are denoted as symbols)
	Button	The three buttons on the upper side of the programming pendant are denoted as follows: START, HOLD, or EMERGENCY STOP. (The button names are denoted as symbols)
	Displays	The menu displayed in the programming pendant is denoted with { }. e.g. {JOB}

Description of the Operation Procedure

In the explanation of the operation procedure, the expression "Select • • • " means that the cursor is moved to the object item and [SELECT] is pressed, or that the item is directly selected by touching the screen.

Registered Trademark

In this manual, names of companies, corporations, or products are trademarks, registered trademarks, or brand names for each company or corporation. The indications of (R) and TM are omitted.

Contents

1 General Application..... 1-1

1 General Application

Fig. 1-1: JANCD-ASF31-1E (CN4 Connector) I/O Allocation and Connection Diagram (For General Application)

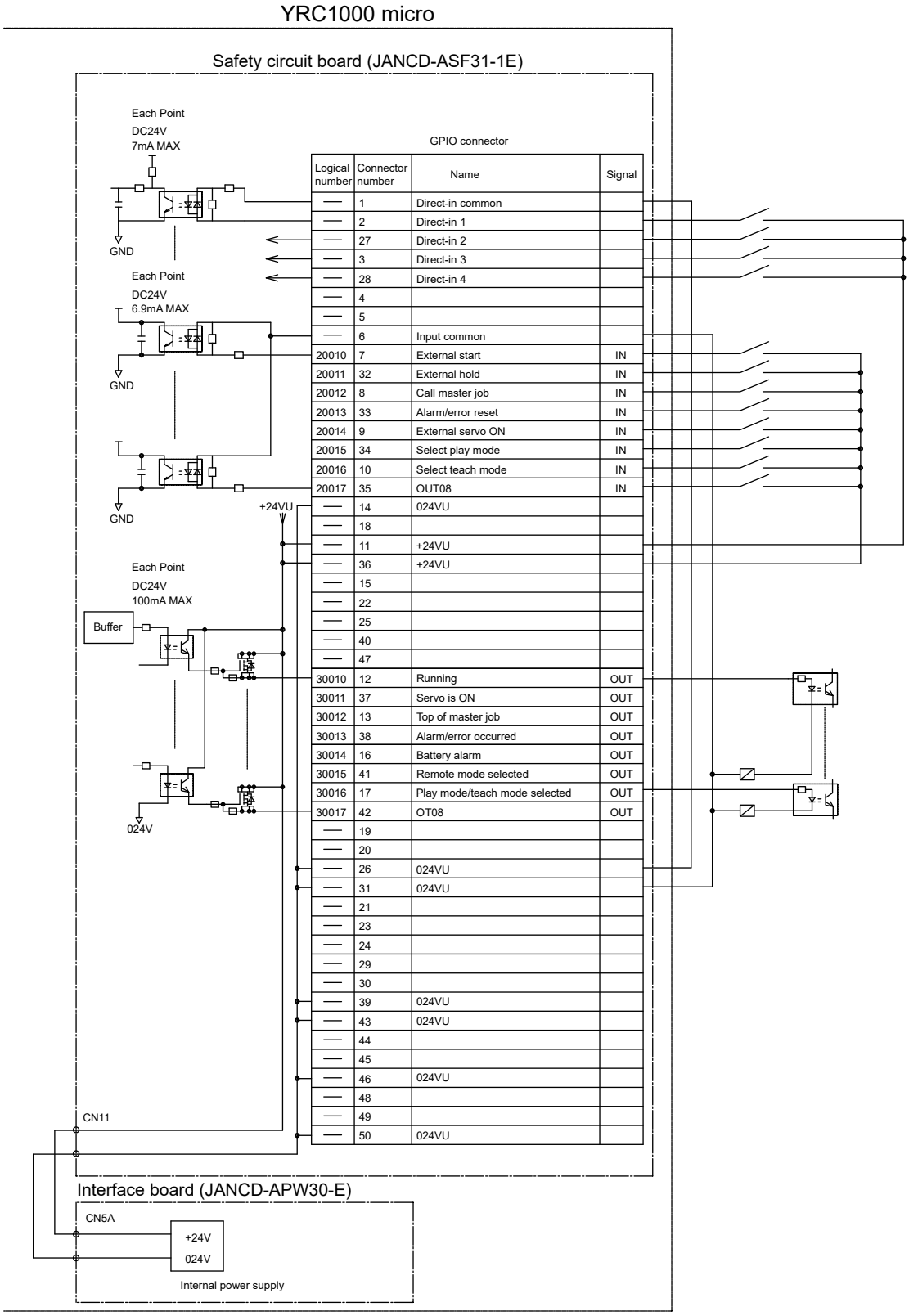

GPIO connector

Logical number	Connector number	Name	Signal
—	1	Direct-in common	
—	2	Direct-in 1	
—	27	Direct-in 2	
—	3	Direct-in 3	
—	28	Direct-in 4	
—	4		
—	5		
—	6	Input common	
20010	7	External start	IN
20011	32	External hold	IN
20012	8	Call master job	IN
20013	33	Alarm/error reset	IN
20014	9	External servo ON	IN
20015	34	Select play mode	IN
20016	10	Select teach mode	IN
20017	35	OUT08	IN
—	14	024VU	
—	18		
—	11	+24VU	
—	36	+24VU	
—	15		
—	22		
—	25		
—	40		
—	47		
30010	12	Running	OUT
30011	37	Servo is ON	OUT
30012	13	Top of master job	OUT
30013	38	Alarm/error occurred	OUT
30014	16	Battery alarm	OUT
30015	41	Remote mode selected	OUT
30016	17	Play mode/teach mode selected	OUT
30017	42	OT08	OUT
—	19		
—	20		
—	26	024VU	
—	31	024VU	
—	21		
—	23		
—	24		
—	29		
—	30		
—	39	024VU	
—	43	024VU	
—	44		
—	45		
—	46	024VU	
—	48		
—	49		
—	50	024VU	

* Cannot be connected to an external power supply.

Table 1-1: Specific Input (Press Tending, Cutting, and Other Applications)

Logical Number	**Input Name / Function**
20010	EXTERNAL START Functions the same as the [START] button in the programming pendant. Only the rising edge of the signal is valid. It starts robot operation (playback). This signal is invalid if external start is prohibited from the playback condition display.
20011	EXTERNAL HOLD The hold lamp turns on and the signal “HOLDING (50071)” turns ON while this signal is ON. Depending on the setting, the status of manipulator can be “HOLDING” while this signal is OFF.
20012	CALL MASTER JOB Only the rising edge of the signal is valid. It calls up the top of the robot program, that is the top of the master job[1)]. This signal is invalid during playback, during teach-lock and when play master or call is prohibited (set from the playback operation condition display).
20013	ALARM/ERROR RESET After an alarm or error has occurred and the cause been corrected, this signal resets the alarm or error.
20014	EXTERNAL SERVO ON Only the rising edge of this signal is valid. This signal turns ON the servo power. Use this signal to turn ON the servo power from an external device.
20015	SELECT PLAY MODE The play mode is selected when the mode key on the programming pendant is set at “REMOTE”. Only the rising edge of the signal is valid. When this selection signal assigned concurrently with other mode selection signal, the teach mode is selected on a priority basis. The signal is invalid while EXTERNAL MODE SWITCH is prohibited.
20016	PLAY/TEACH MODE SELECTED This signal notifies the current mode setting. These signals are synchronized with the mode select switch in the programming pendant. The signal corresponding to the selected mode turns ON

1 A master job is a job (program) which can be called by CALL MASTER JOB.
Other functions are the same as for normal jobs. Normally, the parent job, which manages the child jobs called up immediately after the power is turned ON, is set as the master job.

Table 1-2: Specific Output (Press Tending, Cutting, and Other Applications)

Logical Number	Output Name / Function
30010	RUNNING This signal signifies that the job is running. (Signifies that the job is running, system status is waiting reserved start, or test run is running.) This signal status is the same status as [START] in the programming pendant.
30011	SERVO IS ON This signal signifies that the servo power is turned ON, internal processing such as current position creation is complete, and the system is able to receive the START command. This signal turns OFF when the servo power supply turns OFF. It can be used for YRC1000micro status diagnosis for an external start.
30012	TOP OF MASTER JOB This signal signifies that the execution position is the top of the master job. This signal can be used to confirm that the master job has been called.[1)]*1*
30013	ALARM/ERROR OCCURRED This signal signifies that an alarm or an error occurred. If a major error occurs, this signal remains ON until the main power is turned OFF.
30014	BATTERY ALARM This signal turns ON to notify that the battery requires replacing when the voltage drops from the battery for backup memory of the encoder. Major problems may result if memory data is lost because of an expired battery. It is recommended to avoid these problems by using this signal as a warning signal.
30015	REMOTE MODE SELECTED This signal notifies the current mode setting. These signals are synchronized with the mode select switch in the programming pendant. The signal corresponding to the selected mode turns ON.
30016	PLAY MODE/TEACH MODE SELECTED This signal notifies the current mode setting. These signals are synchronized with the mode select switch in the programming pendant. The signal corresponding to the selected mode turns ON.

1 This signal is not output during operation.

YRC1000micro OPTIONS
INSTRUCTIONS

STANDARD I/O SIGNAL ASSIGNMENT TABLE (PNP SPECIFICATION)
FOR GENERAL-PURPOSE I/O BOARD TYPE: JANCD-ASF31-1E

For inquiries or after-sales service on this product, contact your local YASKAWA representative as shown below.

YASKAWA ELECTRIC CORPORATION
2-1 Kurosakishiroishi, Yahatanishi-ku, Kitakyushu, 806-0004, Japan
Phone: +81-93-645-7703 Fax: +81-93-645-7802
www.yaskawa.co.jp

YASKAWA AMERICA, INC. (MOTOMAN ROBOTICS DIVISION)
100 Automation Way, Miamisburg, OH 45342, U.S.A.
Phone: +1-937-847-6200 Fax: +1-937-847-6277
www.motoman.com

YASKAWA EUROPE GmbH (ROBOTICS DIVISION)
Yaskawastrasse 1, 85391, Allershausen, Germany
Phone: +49-8166-90-0 Fax: +49-8166-90-103
www.yaskawa.eu.com

YASKAWA NORDIC AB
Verkstadsgatan 2, Box 504, SE-385 25 Torsas, Sweden
Phone: +46-480-417-800 Fax: +46-486-414-10
www.yaskawa.se

YASKAWA ELECTRIC (CHINA) CO., LTD.
22F, One Corporate Avenue, No.222 Hubin Road, Huangpu District, Shanghai 200021, China
Phone: +86-21-5385-2200 Fax: +86-21-5385-3299
www.yaskawa.com.cn

YASKAWA SHOUGANG ROBOT CO., LTD.
No.2 Building, No.6 Rongchang East Street, Beijing E&T Development Area, Beijing 100176, China
Phone: +86-10-6788-2858 Fax: +86-10-6788-2878
www.ysr-motoman.cn

YASKAWA ELECTRIC KOREA CORPORATION
6F, 112, LS-ro, Dongan-gu, Anyang-si, Gyeonggi-do, 14118, Korea
Phone: +82-31-8015-4224 Fax: +82-31-8015-5034
www.yaskawa.co.kr

YASKAWA ELECTRIC TAIWAN CORPORATION
12F, No.207, Sec. 3, Beishin Rd., Shindian District, New Taipei City 23143, Taiwan
Phone: +886-2-8913-1333 Fax: +886-2-8913-1513
www.yaskawa.com.tw

YASKAWA ASIA PACIFIC PTE. LTD.
30A Kallang Place, #06-01, 339213, Singapore
Phone: +65-6282-3003 Fax: +65-6289-3003
www.yaskawa.com.sg

YASKAWA ELECTRIC (THAILAND) CO., LTD.
59, 1st-5th Floor, Flourish Building, Soi Ratchadapisek 18, Ratchadapisek Road, Huaykwang,
Bangkok 10310, Thailand
Phone: +66-2-017-0099 Fax: +66-2-017-0199
www.yaskawa.co.th

PT. YASKAWA ELECTRIC INDONESIA
Secure Building-Gedung B Lantai Dasar & Lantai 1 Jl. Raya Protokol Halim Perdanakusuma,
Jakarta 13610, Indonesia
Phone: +62-21-2982-6470 Fax: +62-21-2982-6471
www.yaskawa.co.id

YASKAWA INDIA PRIVATE LIMITED (ROBOTICS DIVISION)
No.136, Sector-8, Industrial Estate, IMT Manesar, Gurugram, Haryana 122050, India
Phone: +91-124-475-8500
www.yaskawaindia.in

©2017 YASKAWA ELECTRIC CORPORATION
Published by YASKAWA

YASKAWA

YASKAWA ELECTRIC CORPORATION

May 2024 17-07

MANUAL NO.
HW1484878 ②